Model Based Analysis and Efficient Control System Design for Fuel Cell Power System

Mashood Nasir Dr. Abdul Aziz Bhatti Waqas Tariq Toor
mashood.nasir@umt.edu.pk drabhatti@umt.edu.pk waqas.toor@umt.edu.pk
University of Management and Technology, Lahore

***Abstract*— In this research work a Fuel cell based power system is explicitly modeled and analyzed under the various possible operating conditions. In order to ensure a reliable, efficient, durable and cost effective operation, a control system based on the management of air and fuel flow regulations can be designed. Fuel cell systems produce clean energy and they have got higher energy conversion efficiencies as compared to Internal Combustion Engines based power plants. In order to make this technology economically viable, feed of the air and fuel, pressure regulations, flow rates and the heat produced must be optimally controlled. Oxygen depletion, during the transient reactions, is the major cause of low performance and subsequent deteriorations. In order to overcome the stated limitations, internal subsystem reactions are modeled deliberately and examined carefully. Based on the mathematical deductions and feedback control techniques, optimal pressures and flow rates for hydrogen and oxygen are selected. Breath control unit can be efficiently controlled by using this model to avoid degradation. The output voltage model is also delineated in terms of internal electrochemical dynamics to confirm the maximum power gain by the selected parameters. Results are also verified using MATLAB/ Simulink tool. The Proposed methodology is equally valid for both Polymer Electrolyte Membrane and Solid Oxide Fuel Cells based power systems with some modifications.**

Keywords- PEMFC, SOFC, Fuel Cell Power System, Breath Control Unit, Optimal Flow Rate,

1. INTRODUCTION

Fuel Cells (FCs) are electrochemical devices that convert the chemical energy of the supplied gaseous fuel into the electrical energy. The only byproduct of this exothermic electrochemical reaction is water. Due to their clean and efficient nature of reaction, fuel cells are regarded as the environmental friendly source of energy. Very low emission rate and high conversion efficiency has made the fuel cell technology viable and compete able with the conventional sources of power generation [1,2,3].Owing to their striking characteristics, FCs are recognized as one of the most promising technologies, capable enough to meet the future power generation requirements and mitigate the environmental hazards associated with the conventional power generation [3]. A number of fuel cells can be connected in series and parallel configuration to derive the load of desired power, so such fuel cell stacks will be widely used for the stationary and mobile applications in the coming future. In this research work main focus is imparted on a FC based power plant. A number of auxiliary equipments like compressors, fuel tanks, valves, water separators and humidifier are installed, in order to ensure a reliable, feasible and controlled operation of power system[]. The success of the power system operation depends upon the optimal control of these auxiliary equipments, their subsequent outputs, reactants pressure and flow rate. So the operations affecting the output of power plant are modeled and then using control technique, are optimally configured. The block diagram of the proposed model is shown in Figure1. The models for, compressor, supply and return manifold, anode flow, cathode flow, membrane flow, humidifier and the resultant voltage produced are delineated and the desired parameters that ensure the maximum gain are found. Then feed forward and feedback controller are used to set the input and output parameters of auxiliaries according to the criteria found in modeling procedure [5,6]. The output power, current and voltage of a stack is highly dependent upon the mutual contact of oxygen, fuel, electrodes and the catalyst employed, so a certain pressure of reactants must be maintained all the times to replace the consumed reactants. Oxygen flow rate is controlled by a compressor and hydrogen feed is controlled via a high pressurized, valve controlled storage tank [5,7]. During the peak current demand of the load, oxygen depletes very fast. During such transients, if the desired pressure of the air is not maintained, it may cause hot spots and deteriorations in the stack, limiting the overall performance, life time and efficiency of the power system. So in order to avoid this oxygen starvation, compressor motor is always kept aware of the oxygen consumed in the reaction via a sensor and controller. The controller cops very well with the oxygen depletion situations and instantaneously increases the air flow to avoid degrading. Hydrogen supplied through a highly energized storage tank, can be easily maintained to the nominal value via a simple valve control. Proton Exchange Membrane Fuel cell (PEMFC) based system is preferred for analysis because its operation lies in low range of temperature i.e. 60-100 ^{o} C. Since the voltage produced in such a system is dependent upon the thickness of membrane, its resistance offered to the flow of H^{+}, which further is a function of membrane humidity, and the humidity level of the reactant feed, So the humidifier block is also controlled to achieve the nominal set points of humidity levels[5,7]. Further, to make the dynamics and avoid the complexity it is assumed a temperature control unit is provided that maintain a constant temperature throughout the operation of this power system. Although the methodology implemented is not validated on a practical system, yet the simulations and comparison with the available date in literature verifies the practicality of the proposed model.

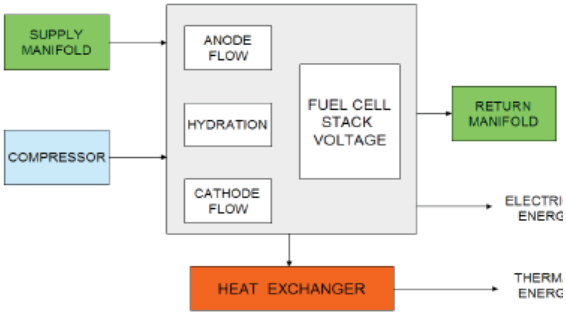

Figure 1 Block Diagram of the proposed Model

2. Model Formation for Auxiliary Equipments in Power System

The block diagram of the proposed model is shown in Figure 1 and is composed of both auxiliary equipments and main fuel cell stack system. Major auxiliary equipments are included i.e. compressor, humidifier, air cooler, supply and return manifolds. These models are formulated on the basis of the mass continuity equation and the principles of thermodynamics and electric machinery.

2.1 Compressor Model

Compressor is modeled in terms of static and dynamic parts. Static part serves the purpose of calculating the output temperature and power require running the compressor at the desired flow rate [5]

$$T_{comp^0} = T_{comp^i} + \frac{T_{comp^i}}{\eta_{comp}}\left[\left(\frac{P_{comp^i}}{P_{comp^i}}\right)^{\frac{\gamma-1}{\gamma}} - 1\right] \quad (2)$$

Where,

T_{comp^0} = Temperature of compressor output

T_{comp^i} = Temperature of compressor input

P_{comp^0} = Pressure of compressor output

P_{comp^i} = Pressure of compressor input

η_{comp} = Efficiency of the compressor

γ = Cp/Cv= 1.4, the ratio of specific heat of air at constant pressure to the specific heat at constant volume.

T_{comp^i} and P_{comp^i} are assigned standard atmospheric temperature and pressure values and P_{comp^o} is set equal to supply manifold pressure, P_{sm} , that will calculated in the section 2.2.

Dynamic part models the combined inertia of compressor and motors in terms of torque and calculates the speed.

$$J_{comp}\frac{d\omega_{comp}}{dt} = \tau_{motor} - \tau_{comp} \quad (2)$$

Where, J_{comp} = combined inertia of motor and compressor

τ_{motor} = Torque of the motor

τ_{comp} = Required torque to drive the compressor

$$\tau_{comp} = \frac{C_p}{\omega_{comp}}\frac{T_{comp^i}}{\eta_{comp}}\left[\left(\frac{P_{comp^i}}{P_{comp^i}}\right)^{\frac{\gamma-1}{\gamma}} - 1\right]W_{comp} \quad (2)$$

τ_{motor}, is given by the static torque equation of the motor [12].

$$\tau_{motor} = \eta_m K_w (V_m - K_m \omega_{motor}) \quad (3)$$

k_w, k_m , being the motor constant depends upon the type of the motor, v_m is the voltage of motor and ω_{motor} is the speed of the compressor motor.

The calculated speed along with compressor input pressure and temperature is used to calculate the mass flow rate of air using compressor map in the static model. Instead of compressor map, different non linear curve fitting methods like Jensen and Kristen and least square curve fitting may also be used for mass flow rate calculations in order to make the dynamics simulation faster and to avoid the error of interpolation [5,8].

2.2 Supply Manifold Model

The volume of pipes and the cathode supply manifold including humidifier and air cooler volume, between fuel cell stack and compressor is modeled in terms of mass continuity and energy conservation equations. The inlet mass flow to the supply manifold W_{sm}^i is equal to output mass flow rate of compressor W_{comp}^o. There is a very small change in the input and output pressure of the supply manifold, so mass flow out of the supply manifold W_{sm}^o is related linearly to the input mass flow rate of the supply manifold W_{sm}^i and is given by

$$W_{sm^o} = K_{sm}(P_{sm} - P_{cathode}) \quad (4)$$

Where, K_{sm} is the constant for supply manifold depends upon the nozzle and pressure compression ratio; P_{sm} and $P_{cathode}$ are the pressure for supply manifold and cathode model flow discussed in section 3.2.

From mass continuity equation, the rate of change of the mass of the supply manifold m_{sm} and the supply manifold pressure P_{sm} are calculated by

$$\frac{dm_{sm}}{dt} = W_{comp} - W_{sm^o} \quad (5)$$

$$\frac{dp_{sm}}{dt} = \frac{\gamma R_a}{V_{sm}}\left(W_{comp}T_{comp} - W_{sm^o}T_{sm}\right) \quad (6)$$

R_a being the gas constant for air, V_{sm} is the volume of supply manifold and γ =1.4 for air as defined previously.

2.3 Return Supply Manifold

The volume of the pipes after the exhaust of the fuel cell stack is modeled in terms of return supply manifold. Since no compression is involved so temperature out of the stack remains constant and is equal to the temperature of return supply manifold T_{rm}. The pressure of the return manifold

P_{rm} is governed by the mass conservation and the ideal gas law.

$$\frac{dp_{rm}}{dt} = \frac{R_a T_{rm}}{V_{rm}}\left(W_{cathode^o} - W_{rm^o}\right) \tag{7}$$

$W_{cathode}{}^{o}$ is calculated in the cathode flow model and W_{rm} is the mass flow rate of the return manifold which is controlled by the pressure and valve opening area of the return manifold.

3. Fuel Cell Stack Model

The electrochemical reactions and internal dynamics of fuel and air flow, along with membrane hydration effects are modeled in fuel cell stack model.[5,8,10] The combined assembly of these four sub models i.e. voltage, anode flow, cathode flow and hydration assemblies is shown in Figure 2.

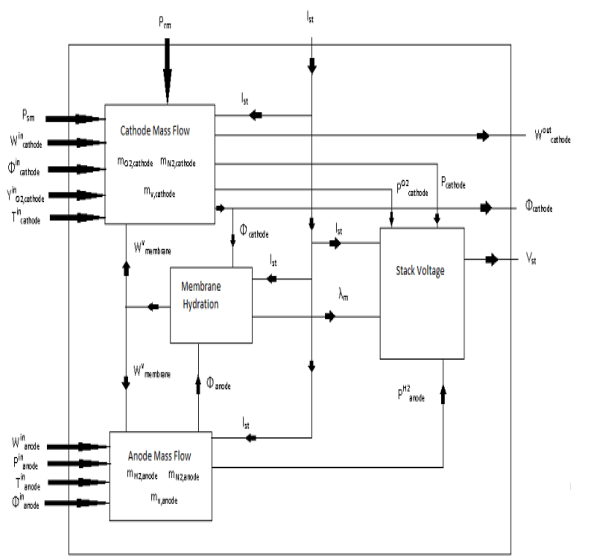

Figure 2 Block Diagram of the proposed Model

3.1 Stack Voltage Model

In stack voltage model Nernst equation is used to calculate the open circuit voltage V_{oc}, which accounts for the energy balance between the chemical energy of the reactants and resultant electrical energy produced at different conditions of temperature and pressure. The corresponding Nernst equation used to calculate the open circuit voltage is [9]

$$E_{cell} = E_0 + \frac{RT}{2F}\ln\left(p_{H_2}.p_{O_2}^{1/2}\right) \tag{8}$$

$$E_0 = E_0^* - k_E\left(T - 298\right) \tag{9}$$

Where, E_0^* is the voltage at the standard voltage at 1-atm pressure and temperature of 298-K and K_E is a constant corresponding to corrected values of temperature and pressure. In normal operating conditions the output voltage of fuel is less than E_{cell} due to several losses. These are Activation loss V_{act}, Ohmic loss V_{ohm} and Concentration loss V_{conc}. The output voltage of the fuel cell is formulated as

$$V_{cell} = E_{cell} - V_{ohm} - V_{act} - \Delta V_{conc} \tag{10}$$

For a fuel cell stack, the output voltage is found

$$V_{stack} = N_{cell} V_{cell} \tag{11}$$

Calculations for these losses are mention in sections below.

3.1.1 Activation Voltage Loss

Activation voltage drop is mainly due to the slowness of the reactions taking place on the surface of the electrodes. This loss is calculated by the following equation [17].

$$V_{act} = -[\xi_1 + \xi_2 T + \xi_3 T \ln\left(c_{O_2}^*\right) + \xi_4 T \ln\left(I\right)] \tag{12}$$

Where, ξ_i are the parametric coefficients and $c_{O_2}^*$ is the oxygen concentration, on the cathode, given by

$$c_{O_2}^* = \frac{p_{O_2}^*}{5.08\times10^6 \exp\left(\frac{-498}{T}\right)} \tag{13}$$

3.1.2 Ohmic Voltage Loss

This drop is due to the resistances of electrodes, the conducting resistance between the membrane and electrodes, and resistance of polymer membrane. The overall ohmic voltage drop is determined as

$$V_{ohm} = IR_{ohm} \tag{14}$$

$$R_{ohm} = R_{ohm0} + k_{RI} I - k_{RT} T \tag{15}$$

Where, R_{ohm0} is the constant part, R_{ohm1} is the current dependant part and R_{ohm2} is temperature dependant part of the resistance. [10]

3.1.3 Concentration Voltage Loss

Concentration Voltage drop is due to the change in concentration of the reactants at the surface of the electrodes as the fuel is used. This voltage drop is calculated as [9]

$$\Delta V_{conc} = m\exp\left(nI\right) \tag{16}$$

Where, m and n are constants whose values taken are $3\text{x}10^{-5}$ V and $8\text{x}10^{-3}$ mA^{-1} respectively.VI and PI curves are shown in Figure 3 and 4.

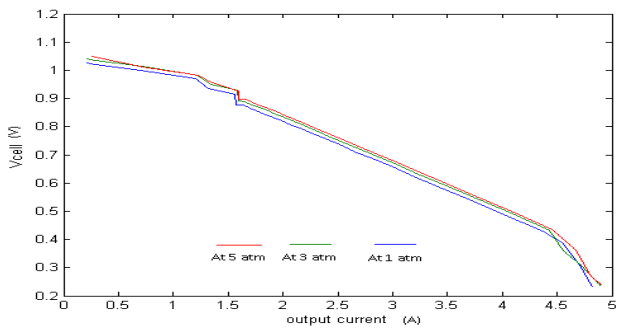

Figure 3 VI Characteristics of Fuel Cell at Various Pressures

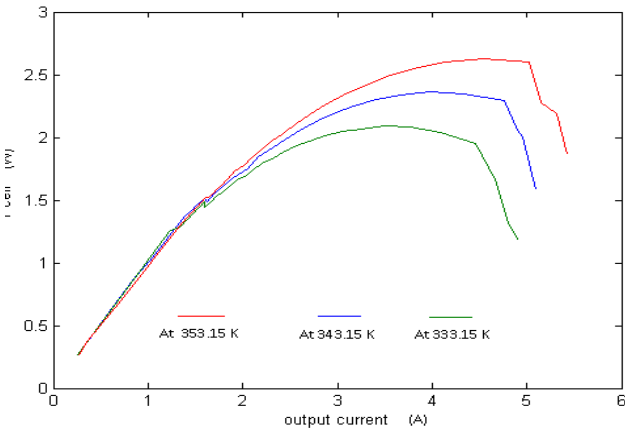

Figure 4 PI Characteristics of Fuel Cell at different pressure

3.2 Cathode Flow Model

Based upon the mass conservation principle and thermodynamic properties, the behavior of air flow is explained and modeled. Following assumptions are made in order to formulate a general model and to avoid complexity of the non ideality.

- All gases are ideal in nature.
- The temperature of the air inside the cathode is equal to the stack temperature.
- The properties of the flow exiting the cathode such as temperature, pressure, and humidity are assumed to be the same as those inside the cathode
- When the relative humidity of the gas exceeds 100%, vapor condenses into the liquid form. The liquid water does not leave the stack and will either evaporate when the humidity drops below 100% or accumulate in the cathode.

While modeling the flow in cathode, the mass flow of oxygen, mass flow of nitrogen and mass flow of the water is balanced.

$$\frac{dm_{O_2}}{dt} = W_{O_2^{\,i}} - W_{O_2^{\,0}} - W_{O_2^{\,'}} \tag{17}$$

$$\frac{dm_{N_2}}{dt} = W_{N_2^{\,i}} - W_{N_2^{\,o}} \tag{18}$$

$$\frac{dm_{w,ca}}{dt} = W_{v,ca^{\,i}} - W_{v,ca^{\,o}} + W_{v,ca^{\,'}} + W_{v,memb} \tag{19}$$

Where, m_{O2}, m_{N2} and $m_{w,ca}$ are oxygen, nitrogen and water masses and, W_{O2}, W_{N2} and $W_{v,ca}$ are oxygen, nitrogen and vapor flow rates and subscripts i, o, ', and memb represents the input, output, reacted and membrane values. Using these masses along with the stack temperature T_{st}, the pressures of oxygen, nitrogen and vapors, P_{O2}, N_{O2} and $P_{v,ca}$ are determined at the cathode using ideal gas equation.

$$P_{O_2} = \frac{m_{O_2} R_{O_2} T_{st}}{V_{cathode}} \tag{20}$$

$$P_{N_2} = \frac{m_{N_2} R_{N_2} T_{st}}{V_{cathode}} \tag{21}$$

$$P_{v,ca} = \frac{m_{v,ca} R_v T_{st}}{V_{cathode}} \tag{22}$$

$V_{cathode}$, being the volume of the cathode and R_{O2}, R_{N2}, R_v are the ideal gas constants for the oxygen, nitrogen and the vapor. Total cathode pressure, $P_{cathode}$ is the sum of these individual pressures and is given by

$$P_{cathode} = P_{O_2} + P_{N_2} + P_{v,ca} \tag{23}$$

Now the total flow rate out of the cathode, $W_{cathode}^{\,o}$ is related to and P_{rm} and $P_{cathode}$ via an orifice constant $K_{cathode}^{\,o}$.

$$W_{cathode^{o}} = K_{cathode^{o}} \left(P_{cathode} - P_{rm}\right) \tag{24}$$

An important parameter that has to be monitored continuously is the amount of the oxygen that is consumed or being reacted, $W_{O2'}$ in the electrochemical reaction. This gives the measure to avoid starvation via supplying the same amount of oxygen as being consumed. The production of resultant water as a result of this electrochemical reaction also gives the reasonable measure of the extent of the reaction. In this model we have assumed all the produced water transforms into vapors so $W_{v,ca'}$ must also be found and the following two equations are used to calculate both these parameters[13].

$$W_{O_2^{'}} = MO_2 * \frac{nI_{st}}{4F} \tag{25}$$

$$W_{v,ca^{'}} = MH_2O * \frac{nI_{st}}{2F} \tag{26}$$

where n is the number of cells in the stack I_{st} is the stack current, F is the Faraday's constant and M_{O2} and M_{H2O} is the molar mass of oxygen and water.

3.3 Anode Flow Model

Anode flow model is quite similar to that of cathode model. The only difference is that hydrogen is supplied at anode rather than the air so total anode flow pressure is the sum of hydrogen and vapor pressure, mass of hydrogen, m_{H2} is related to mass flow rate W as,

$$\frac{dm_{H_2}}{dt} = W_{H_2^{\,i}} - W_{H_2^{\,0}} - W_{H_2^{\,'}} \tag{27}$$

Subscripts i, o, and 'represents the input, output, and reacted or generated values.

Similar to that of cathode model total anode pressure P_{anode} and the hydrogen reacted $W_{H2'}$ are found.

$$P_{H_2} = \frac{m_{H_2} R_{H_2} T_{st}}{V_{anode}} \tag{28}$$

$$P_{v,an} = \frac{m_{v,an} R_v T_{st}}{V_{anode}} \tag{29}$$

$$P_{anode} = P_{H_2} + P_{v,ca} \tag{30}$$

$$W_{H_2^{'}} = MH_2 * \frac{nI_{st}}{2F} \tag{31}$$

3.4 Membrane Hydration Model

The membrane hydration model explains the effect of water transport and mass flow rate across the membrane in terms of stack current and relative humidity of the gas in the anode and cathode. The electro osmotic drag phenomenon that occurs due to the water transportation from anode to cathode via protons through the membrane and back diffusion of water molecules from cathode to anode due to water concentration gradient accounts for the water mass flow rate.

Net water transported due to electro-osmotic drag $N_{v,osmo}$ is given by

$$N_{v,osmo} = \frac{n_d I_{st}}{A_{fc} F} \tag{32}$$

Where, A_{fc} is the area of fuel cell stack and nd is drag coefficient [13]

Back Diffusion flow of water N_{diff} is given in terms of the difference of water concentration on anode $W_{c,anode}$ and cathode $W_{c,cathode}$, diffusion constant D and membrane thickness t.

$$N_{diff} = D\left(\frac{W_{c,cathode} - W_{c,anode}}{t}\right) \tag{33}$$

So net flow of water through membrane N_{net} is calculated through the difference of these two equations and yields

$$N_{net} = N_{v,osmo} - N_{diff}$$

$$= \frac{n_d I_{st}}{A_{fc} F} - D\left(\frac{W_{c,cathode} - W_{c,anode}}{t}\right) \tag{34}$$

The total mass flow rate across the membrane $W_{v,memb}$ is given by

$$W_{v,memb} = N_{net} * n * M_{H_2O} * A_{fc} \tag{35}$$

4. Proposed Control System Based on the Model

In general there are three types of control that must be provided for the efficient operation of fuel cell based power plants. These are air/fuel supply control, water and humidifier control and heat management control. We assume here a perfect humidifier and heat management and main focus is imparted on air and fuel flow control systems.

4.1 Hydrogen Flow Control

Hydrogen is stored in a highly pressurized storage tank, so the anode hydrogen flow can be regulated by a servo valve to achieve very high loop bandwidth. The goal of the hydrogen flow control is to minimize the pressure difference across the membrane, i.e. the difference between anode and cathode pressures. Since the valve is fast, it is assumed that the flow rate of hydrogen can be directly controlled based on the feedback of the pressure difference. As the direct pressure measurements are difficult for cathode, so based upon our assumptions we use supply manifold pressure and anode pressure to find the mass flow input to the anode[5,13].

$$W_{anode} = K_1(K_2 P_{sm} - P_{anode}) \tag{36}$$

K1 =2.1 and K2 =0.9 yields the desired optimal control and minimizes the pressure difference between anode and cathode.

4.2 Breath Control Unit

During transient reactions of increased load demands, the value of the reacted oxygen increases substantially. If oxygen supply is not maintained it may result in a high voltage drop, hot spots on the stack and consequent deteriorations. The Performance of fuel cell power system must be stabilized using the air flow control to avoid this degradation. A breath control unit constantly measures the load current and calculates the oxygen reacted from equation (25). Through a feedback loop it provides the signal to compressor. The compressor motor sets its output torque accordingly to ensure the compensation of the consumed oxygen via increasing the mass flow output of compressor W_{comp}^{o}.

The optimal ratio of oxygen R' gives us the measure of the extent of reaction in terms of oxygen reacted out of the supplied air and is defined as,

$$R' = \frac{W_{O_2}^{\ i}}{W_{O_2}^{\ '}} \tag{37}$$

Its value must be equal to 2 to replenish the depletion of oxygen [13] so a control algorithm is proposed to keep this ration within the desired limit.

$W_{O2'}$ is found using equation (25) and W_{O2}^{i} is calculated from these sets of equations

$$W_{O_2}^{\ i} = xO_2^{\ i} * W_{a,cathode} \tag{38}$$

Where, xO_2^{i} is a function of oxygen mole fraction yO_2 and is given by

$$xO_2^{\ i} = \frac{yO_2 * MO_2}{yO_2 * MO_2 + (1 - yO_2)MN_2} \tag{39}$$

In case of increased stack current I_{st}, The reacted oxygen will increase and in order to keep R' equal to 2, $W_{a,cathode}$ is increased via increasing the torque of the motor as shown in the Figure 5

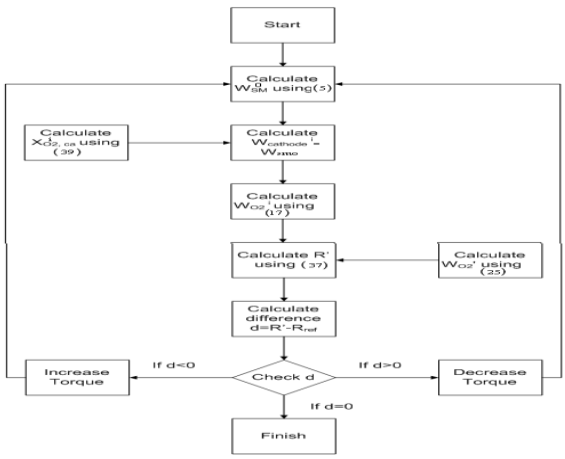

Figure5 Control Algorithm For optimal R'

5 RESULTS AND CONCLUSION

The time responses of oxygen pressure and oxygen ratio R' are plotted and shown in Figure 6. At different values of load currents, the proposed control system is employed

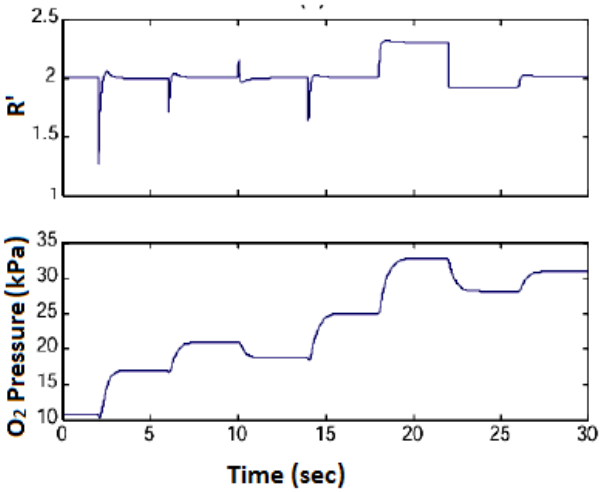

Figure6 Time Responses for Oxygen Ratio and Oxygen Pressures

to maintain the desired oxygen ratio. Partial pressure of oxygen is adjusted accordingly to ensure the replenishment of oxygen depletion during load transients. So, over all this paper explicitly models the auxiliary and main fuel cell stack components for a fuel cell based power system. The inertia dynamics of the compressor, manifold filling dynamics and time-evolving reactant mass and partial pressure, and membrane water content explained in terms of mathematical equations. A control based algorithm is proposed to ensure the minimum pressure difference between the electrodes. The control of breath unit makes sure the availability of oxygen during transient conditions. Although the formulation described here is independent of hardware yet it provides a complete analytical base for the control of fuel cell based power systems.

REFERENCES

[1]. A. S. Patil, T. G. Dubois, N. Sifer, E. Bostic, K. Gardner, M. Quah, and C. Bolton, "Portable fuel cell systems for America's army: Technology transition to the field," *J Power Sources*, vol. 136, no. 2, pp. 220 225, Oct. 2004.

[2]. K.Morita, "Automotive power source in 21st century," JSAE Rev., vol. 24, no. 1, pp. 3–7, Jan. 2003.

[3]. T. B. Atwater, P. J. Cygan, and F. C. Leung, "Man portable power needs of the 21st century: I. Applications for the dismounted soldier.
II. "Enhanced capabilities through the use of hybrid power sources," *J. Power Sources*, vol. 91, no. 1, pp. 27–36, Nov. 2000.

[4]. A. Vahidi, A. Stefanopoulou, and H. Peng, "Current management in a hybrid fuel cell power system: A model-predictive control approach," *IEEE Trans. Control Syst. Technol.*, vol. 14, no. 6, pp. 1047–1057, Nov.2006.

[5]. J.T. Pukrushpan, H. Peng and A.G. Stefanopoulou, "Control-Oriented Modeling and Analysis for Automotive Fuel Cell Systems," ASME Journal of Dynamic Systems, Measurement and Control, Vol.126, No.1, pp.14-25, March 2004.

[6]. Y. Zhu and K. Tomsovic, "Development of models for analyzing the load following performance of microturbines and fuel cells," *J. Electric Power Syst. Res.*, vol. 62, pp. 1–11, 2002.

[7]. *J. Golbert, D.R. Lewin, "Model-based control of fuel cells": (1) regulatory control, Journal of Power Sources 135 (2004) 135–151.*

[8]. *C. Boccaletti, G. Duni, G. Fabbri, E.S.C. Boccaletti, and E. Santini. "Simulation Models of Fuel Cell Systems",in Proc. ICEM, Electrical Machines, Greece, 2006.*

[9]. *J. C. Amphlett, R. F. Mann, B. A. Peppley, P. R. Roberge, and A. Rodrigues, "A model predicting transient responses of proton exchange membrane fuel cells," J. Power Sources, vol. 61, no. 1–2, pp. 183–188, Jul./Aug. 1996.*

[10]. *J. Larminie and A. Dicks, Fuel Cell Systems Explained. New York: Wiley, 2001. Fuel Cell Handbook (Fifth Edition),EG&GServices, Parsons Inc., DEO of Fossil Energy, National Energy Technology Lab, Oct. 2000.*

[11]. *F. A. Farret and M. G. Sim˜oes, Integration of Alternative Sources of Energy. New York: Wiley, 2006, ISBN 0-471-712329.*

[12]. *S. J. Chapman, Electric Machinery and Power System Fundamentals, McGraw Hill, 1st edition, 2002.*

[13]. *J. Pukrushpan, A. Stefanopoulou, and H. Peng, Control of Fuel Cell Power Systems: Principles, Modeling, Analysis, and Feedback Design, Springer Verlag, London, UK, 2004.*